Micro Project of Wireless Sensor Network And IOT{4353201}

“Smart Automatic Night Light System”

Prepared by

Keshari Manshi Rajnish(236150332024)
Tailor Khushi k.(236150332072)

Guided by
MR. A. D. DOBARIYA
MR. D.Y. VANKAWALA

Department of Information & Communication Technology

Government Polytechnic for Girls,

Micro Project :-Smart Automatic Night Light System

Smart Automatic Night Lamp using ESP32 and LDR

1. Introduction

Electricity saving and automation are important aspects of modern smart homes.
This project demonstrates an Automatic Night Lamp using an ESP32 microcontroller, LDR (Light Dependent Resistor) sensor module, and an LED.
The system automatically turns the LED ON in darkness and OFF in light, just like an automatic streetlight or night lamp.

2. Objective

- To design and implement a low-cost automatic light control system.
- To sense surrounding light intensity using an LDR sensor.
- To control an LED automatically depending on light levels.
- To learn IoT hardware (ESP32) and Arduino IDE coding.

3. Components Used

1. ESP32 Development Board – Microcontroller used for processing.
2. LDR Sensor Module – To detect light intensity.
3. LED – Represents the lamp.
4. Resistor (220Ω) – Protects the LED.
5. Jumper Wires – For connections.
6. Breadboard – For circuit assembly.

4. Circuit Diagram

LDR Sensor AO pin → ESP32 GPIO 34 (Analog Input)
VCC of LDR Sensor → 3.3V of ESP32
GND of LDR Sensor → GND of ESP32
LED (+) → GPIO 4 (via 220Ω Resistor)
LED (-) → GND

5. Working Principle

The LDR sensor detects light intensity and outputs an analog value.
The ESP32 reads the analog value from the LDR.
- If the light level is low (darkness) → ESP32 turns LED ON.
- If the light level is high (brightness) → ESP32 turns LED OFF.

This mimics how streetlights or night lamps work automatically.

Wokwi - Online ESP32, STM32,

wokwi.com/projects/438096901538478081

WOKWI SAVE SHARE micro project iot Docs

sketch.ino diagram.json Library Manager

```
#define ldr 4          // Setting a variable for the Photoresistor pin.
#define led 13         // Setting a variable for the LED pin.

float ldrRead;         // Declaring a variable to save the analog reading from the sensor l
float voltage;         // Reserving a variable to use the voltage from the sensor later.

void setup() {
  Serial.begin(9600);              // Setting the baud rate.
  pinMode(ldr, INPUT);             // Configuring the pin as an input.
  pinMode(led, OUTPUT);            // Configuring the pin as an output.
}

void loop() {
  delay(500);                      // A delay between readings.
  ldrRead = analogRead(ldr);       // Saving the read into the "ldrRead" variable.
  voltage = (ldrRead / 4095) * 3.3;  // Calculating the voltage (for ESP32 12-bit ADC & 3

  Serial.print("Analog Read: " + String(ldrRead));
  Serial.println(" Voltage: " + String(voltage) + "V");

  if (ldrRead > 1000) {
    digitalWrite(led, HIGH);     // Turning on the light if it is dark.
  } else {
    digitalWrite(led, LOW);      // Turning off the light if it is light.
  }
}
```

Simulation

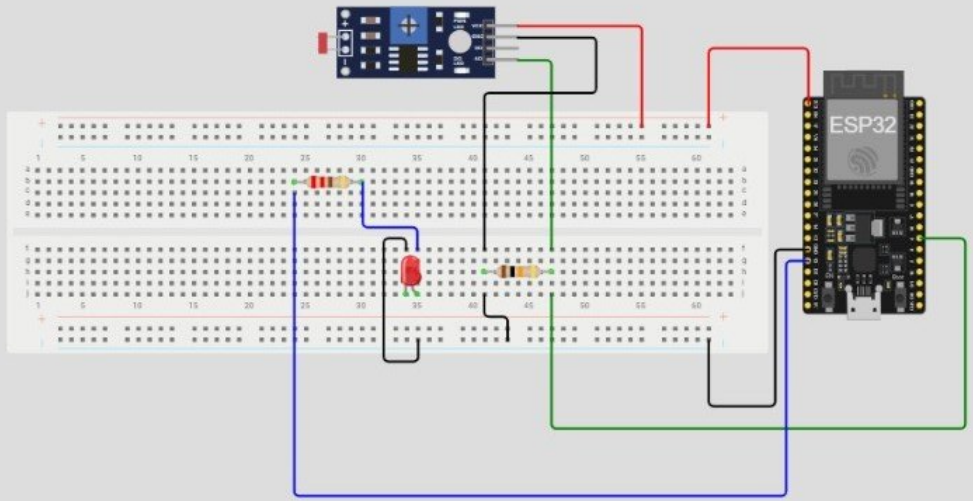

30°C Haze Search ENG IN 20:37 01-08-2025

6. Code :-

```
#define ldr 34   // LDR connected to pin 34
#define led 4    // LED connected to pin 4

float ldrRead;
float voltage;

void setup() {
  Serial.begin(9600);
  pinMode(ldr, INPUT);
  pinMode(led, OUTPUT);
}
void loop() {
  delay(500);
  ldrRead = analogRead(ldr);   // Read LDR value
  voltage = (ldrRead / 4095) * 3.3; // Convert to voltage

  Serial.print("Analog Read: ");
  Serial.println(ldrRead);
  Serial.print("Voltage: ");
  Serial.println(voltage);

  if (ldrRead > 1000) {        // Threshold value
    digitalWrite(led, HIGH);   // LED ON in dark
  } else {
    digitalWrite(led, LOW);    // LED OFF in light
  }
}
```

8. Advantages

- Low cost.
- Saves electricity.
- Fully automatic – no manual switching.
- Can be expanded to control real home appliances.

9. Conclusion

The project successfully demonstrates a Smart Automatic Night Lamp using ESP32 and LDR.
The LED automatically turns ON in darkness and OFF in brightness.
This concept can be scaled up for real-time smart home and IoT automation system.